Technical data sheet

Product features

Electric fryer 0,38 kW/l, 8 l counter top drain tap 230 V / 1N		
Model	**SAP Code**	00000893
FE 07 V	**A group of articles - web**	Fryers and French Fries Holders



- Basin volume [l]: 8
- Drain type: On the front panel
- Drain: Yes
- Maximum device temperature [°C]: 190
- Minimum device temperature [°C]: 50
- Material: Stainless steel
- Heating location: Inside the tank
- Ignition: Electric
- Number of baskets: 1
- Basket size [mm]: 210 x 235 x 100

SAP Code	00000893	**Power electric [kW]**	3.000
Net Width [mm]	306	**Loading**	230 V / 1N - 50 Hz
Net Depth [mm]	441	**Basin volume [l]**	8
Net Height [mm]	381	**Number of baskets**	1
Net Weight [kg]	8.50	**Basket size [mm]**	210 x 235 x 100

RM GASTRO, s.r.o.,
Třída Čs. armády 816,
391 81 Veselí nad Lužnicí 1, ID:49825062

Technical data sheet

Technical drawing

Electric fryer 0,38 kW/l, 8 l counter top drain tap 230 V / 1N		
Model	**SAP Code**	00000893
FE 07 V	**A group of articles - web**	Fryers and French Fries Holders

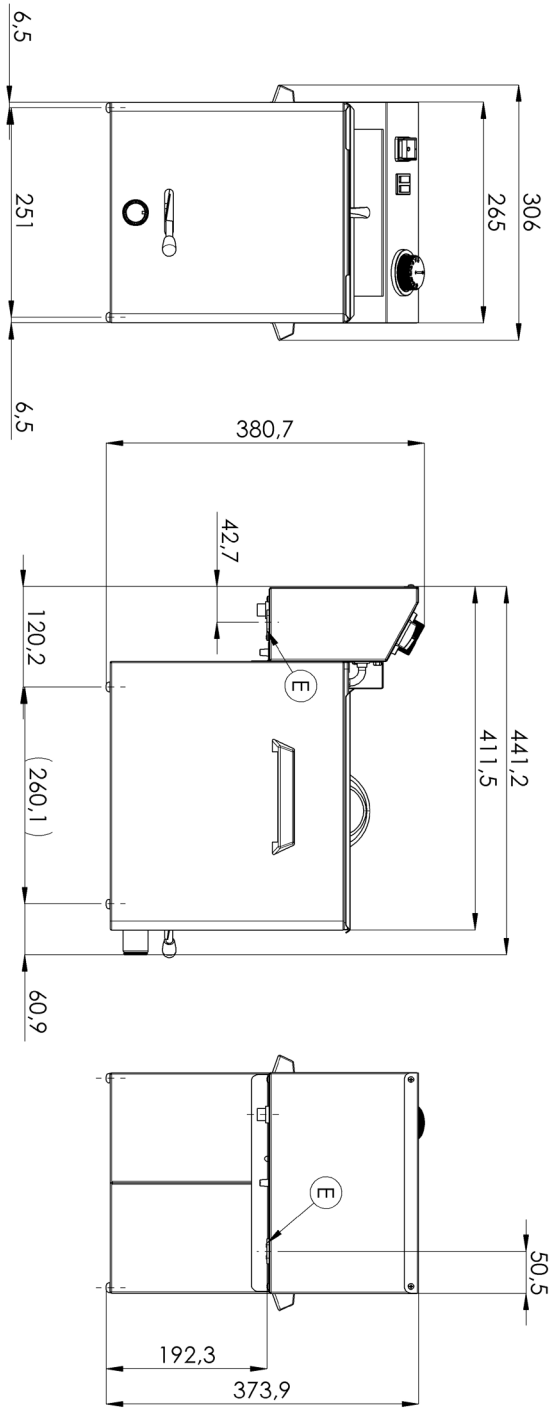

RM GASTRO, s.r.o.,
Třída Čs. armády 816,
391 81 Veselí nad Lužnicí 1, ID:49825062

Technical data sheet

Product benefits

Electric fryer 0,38 kW/l, 8 l counter top drain tap 230 V / 1N		
Model	**SAP Code**	00000893
FE 07 V	**A group of articles - web**	Fryers and French Fries Holders

1 **All-stainless design**

long life
resistance of AISI 304 stainless steel material
the material does not cut

- savings on service interventions
- easier and faster operation

2 **Degree of protection of the control elements IPX4**

maintenance-free system
resistance to splash water
long life

- savings on service interventions
- easy cleaning and maintenance of equipment

3 **Effective cold zone**

prevents food residues from burning
there is no change in the taste of the oil

- longer oil life
- easy access and maintenance

4 **Removable heating element**

longer lifetime
easy access

- fully removable electric box with heating element for convenient cleaning and servicing
- easy access even to corners and time saving

5 **Removable container**

stainless steel container with handles

- easier cleaning and handling
- dishwasher safe

6 **Manipulation**

easy portability

- flexibility in the kitchen, can be used for banquets

7 **Prevention of spontaneous combustion**

higher rear chimney

- safer heat dissipation and separation of oil and ventilation from the fryer

8 **2 thermostats**

safety and working thermostat

- traffic safety
- prevention of spontaneous combustion
- Prevention of oil flashover

RM GASTRO, s.r.o.,
Třída Čs. armády 816,
391 81 Veselí nad Lužnicí 1, ID:49825062

Technical data sheet

Technical parameters

Electric fryer 0,38 kW/l, 8 l counter top drain tap 230 V / 1N		
Model	**SAP Code**	00000893
FE 07 V	**A group of articles - web**	Fryers and French Fries Holders

1. **SAP Code:**
   00000893
2. **Net Width [mm]:**
   306
3. **Net Depth [mm]:**
   441
4. **Net Height [mm]:**
   381
5. **Net Weight [kg]:**
   8.50
6. **Gross Width [mm]:**
   515
7. **Gross depth [mm]:**
   310
8. **Gross Height [mm]:**
   440
9. **Gross Weight [kg]:**
   9.50
10. **Device type:**
    Electric unit
11. **Construction type of device:**
    Table top
12. **Power electric [kW]:**
    3.000
13. **Loading:**
    230 V / 1N - 50 Hz
14. **Ignition:**
    Electric
15. **Protection of controls:**
    IPX4
16. **Material:**
    Stainless steel
17. **Indicators:**
    operation and warm-up
18. **Worktop material:**
    AISI 304
19. **Worktop Thickness [mm]:**
    0.80
20. **Standard equipment for device:**
    lid, basket, drain plug
21. **Basin volume [l]:**
    8
22. **Maximum device temperature [°C]:**
    190
23. **Minimum device temperature [°C]:**
    50
24. **Safety thermostat up to x ° C:**
    235
25. **Adjustable feet:**
    Yes
26. **Heating element material:**
    AISI 304
27. **Number of baskets:**
    1
28. **Basket size [mm]:**
    210 x 235 x 100

RM GASTRO, s.r.o.,
Třída Čs. armády 816,
391 81 Veselí nad Lužnicí 1, ID:49825062

Technical data sheet

Technical parameters

Electric fryer 0,38 kW/l, 8 l counter top drain tap 230 V / 1N		
Model	**SAP Code**	00000893
FE 07 V	**A group of articles - web**	Fryers and French Fries Holders

29. Heating element construction:
Large surface area coiled heating element to extend its life and heat the oil bath evenly

30. Drain type:
On the front panel

31. Drain:
Yes

32. Heating location:
Inside the tank

33. Cross-section of conductors CU [mm²]:
0,75

RM GASTRO, s.r.o.,
Třída Čs. armády 816,
391 81 Veselí nad Lužnicí 1, ID:49825062